BO AE 62 A

60CM CONVENTIONAL OVEN

PRODUCT FEATURES

- 6 functions

Convection, Fan Assist Grill, Full Grill, Fan Bake, Top Heating, Light

- Mechanical control
- 5 shelf positions
- Triple glazed glass door
- Automatic Cut Off Timer
- A class in energy efficiency
- Cavity volume: 56 litres
- Max. temperature: 250 °C
- Total power load: 2.64kW
- Accessories: Grill Tray, Baking Tray and Rotisserie

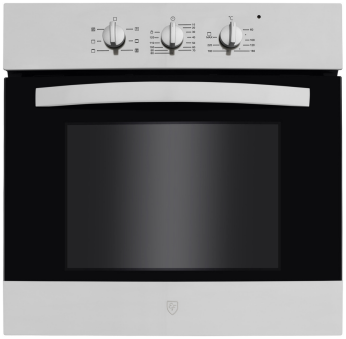

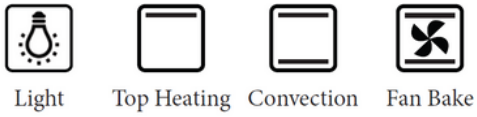

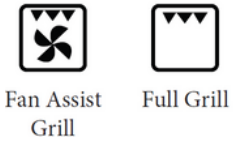

DIMENSIONS

- Product Size: W594 x D568 x H594mm
- Cut-Out Size: W565 x D550 x H585mm

56L

A-10% ENERGY

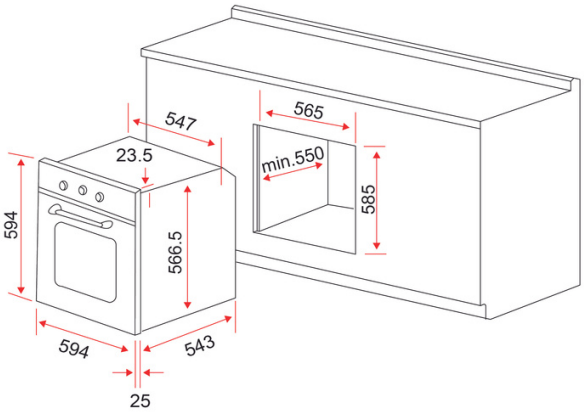

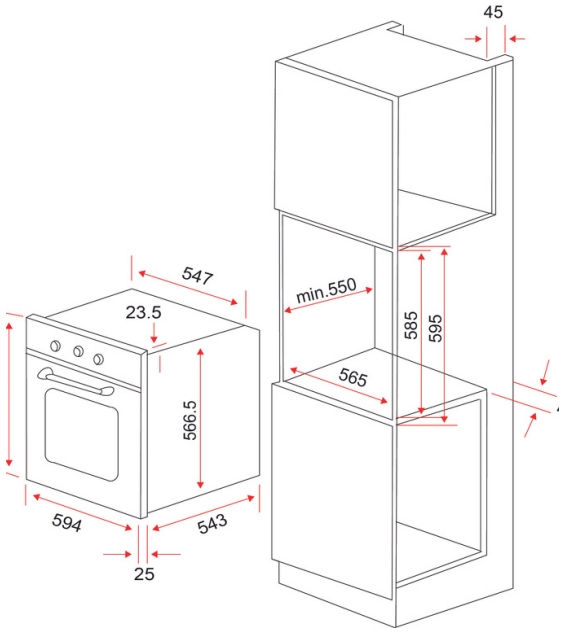

www.ef.com.sg
EF Home Appliances
@efappliances

CASA